Overview

- The RT485 is a 3.3V to 5V power supply, half-duplex high-speed communication interface chip, fully compliant with RS485 and RS422 communication protocols. Its maximum power consumption is only 260μA, and the minimum power consumption can be as low as 105μA.
- The RT485 includes one driver and one receiver, both of which can be independently enabled or disabled. When both are disabled, both the driver and receiver outputs enter a high-impedance state.
- The RT485 features a 1/8 unit load, allowing up to 256 transceivers to be connected to the same communication bus. It achieves error-free data transmission at rates up to 16Mbps.
- Operating within a voltage range of 3.3V to 5.0V, the RT485 includes functions such as fail-safe, over-temperature protection, current-limiting protection, and over-voltage protection.

Features

- **Supply Voltage**: 3.3V to 5V
- **ESD Protection**: 15KV ESD protection
- **Transmission Rate**: 16Mbps
- **Bus Capacity**: Allows up to 256 devices to connect to the bus
- **Protection**: Over-temperature protection function
- **Power Management**: Low-power shutdown function
- **Package**: SOP8 package

Applications

- Industrial Control
- Electric, Water, and Gas Meters
- EMI Sensitive Transceiver Applications
- Security Systems
- Lighting Systems
- Instrumentation

Structure

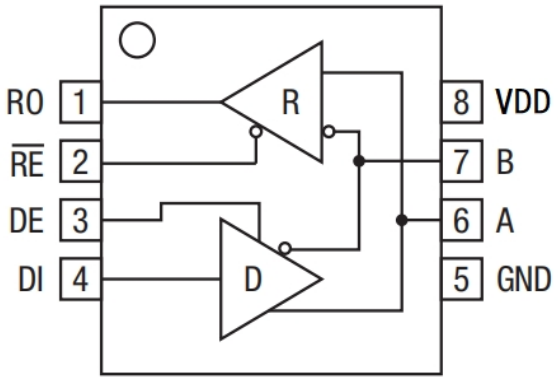

Pin Definitions

Pin	Name	Function	I/O
1	RO	Receiver Output: RO is High if A-B ≥ 0.2V; RO is Low if A-B ≤ -0.2V; RO is High if A and B are open or shorted.	O
2	$\overline{RE}$	Receiver Output Enable: When $\overline{RE}$ is Low, RO is enabled; When $\overline{RE}$ is High, RO is in high impedance.	I
3	DE	Driver Output Enable: Pulling DE High enables driver outputs A and B; they are in high impedance when DE is Low.	I
4	DI	Driver Input: If DI is Low, A is Low and B is High; if DI is High, A is High and B is Low.	I
5	GND	Ground	
6	A	Receiver Input and Driver Output.	I/O
7	B	Receiver Input and Driver Output.	I/O
8	VDD	Power Supply	

Truth Table

Receiver Truth Table

Input			Output
$\overline{RE}$	DE	A - B	RO
L	X	≥0.2V	H
L	X	≤-0.2V	L
L	X	Open/shorted	H
H	H	X	Z
H	L	X	Z

Driver Truth Table

Input			Output	
$\overline{RE}$	DE	DI	B	A
X	H	H	L	H
X	H	L	H	L
L	L	X	Z	Z
H	L	X	Z	

Absolute Maximum Ratings

Unless otherwise specified, T_{amb}= 25℃

Parameter Name	Symbol	Rated Value	Unit
Supply Voltage	V_{DD}	-0.3~7	V
Limit Input/Output Voltage	V_{IN}/V_{OUT}	GND-0.3~V_{DD}+0.3	V
A/B Limit Input/Output Voltage	$V_{INA/B}/V_{OUTA/B}$	-13~13	V
Operating Ambient Temperature	T_{amb}	-40~85	℃
Storage Temperature	T_{stg}	-65~150	℃

DC Electrical Characteristics

Unless otherwise specified, V_{DD}=5V±5%, T_{amb}= 25℃

parameter declaration	symbol	condition		minimum	typical case	maximum	unit
Driver							
differential output voltage	V_{OD1}	No load			VCC	VCC	V
differential output voltage	V_{OD2}	R=50Ω (RS-422) (1)		2			V
		R=27Ω (RS-485) (1)		1.5			V
differential output voltage increment	ΔV_{OD}	R=50Ω or 27Ω(1)				0.2	V
common-mode output voltage	V_{OC}	R=50Ω or 27Ω(1)				3	V
Common-mode output voltage increment	ΔV_{OC}	R=50Ω or 27Ω(1)				0.2	V
Digital input high level	V_{IH1}	DE、$\overline{RE}$、DI		2.0			V
Digital input low level	V_{IL1}	DE、$\overline{RE}$、DI				0.8	V
digital input current	I_{IN1}	DE、$\overline{RE}$、DI		-2		2	μA
A、B input current	I_{IN2}	DE=GND, V_{DD} =GND or 5.25V	Vin=12V			125	μA
			Vin=-7V			-75	μA
output short-circuit current	I_{OD1}	-7V≤V_{OUT}≤V_{DD}		-250			mA
		0V≤V_{OUT}≤12V				250	mA
		0V≤V_{OUT}≤V_{DD}		±25			mA
Receiver							
differential threshold voltage	V_{TH}	-7V≤V_{CM}≤12V		-200		200	mV
Input hysteresis voltage	ΔV_{TH}				50		mV
Output high voltage	V_{OH}	I_O=-8mA		3.5	4.67		V
Output low voltage	V_{OL}	I_O=8mA			0.1	0.4	V
three-state output current	I_{OZR}	0.4V≤V_O≤2.4V				±1	μA
input resistance	R_{IN}	-7V≤V_{CM}≤12V		96	182		kΩ
output short-circuit current	I_{OSR}	0V≤V_{RO}≤V_{DD}		±7	83	±95	mA
Current Consumption							
working current	I_{CC}	No load, $\overline{RE}$=DI =GND or V_{DD}, V_{DD}=5V	DE=V_{DD}		260		μA
			DE=GND		174		
		No load, $\overline{RE}$=DI =GND or V_{DD}, V_{DD}=3.3V	DE=V_{DD}		153		
			DE=GND		105		
Turn-off mode operating current	I_{SHDN}	DE=GND, $\overline{RE}$=V_{DD}			0.002	10	μA
Electrostatic Protection (A/B)	ESD	Human Body Model			±15		kV

Switching Characteristics

Unless otherwise specified, V_{DD}=5V±5%, T_{amb}= 25℃

parameter declaration	symbol	condition	minimum	typical case	maximum	unit
Input-to-output delay of the driver	t_{DPLH}	R_{DIFF}=54Ω,C_{L1}=C_{L2}=100pF(2)			60	ns
Input-to-output delay of the driver	t_{DPHL}	R_{DIFF}=54Ω,C_{L1}=C_{L2}=100pF(2)			60	
|tDPLH-tDPHL|	t_{DSKEW}	R_{DIFF}=54Ω,C_{L1}=C_{L2}=100pF(2)			±10	ns
Drive rise and fall time	t_{DR}, t_{DF}	R_{DIFF}=54Ω,C_{L1}=C_{L2}=100pF(2)			25	ns
Maximum data transmission rate	f_{MAX}		16			Mbps
drive enable delay	t_{DZH}	C_L=100pF, S2 closed(3)			150	ns
drive enable delay	t_{DZL}	C_L=100pF, S1closed(3)			150	ns
Drive shutdown delay	t_{DLZ}	C_L=15pF, S1closed(3)			100	ns
Drive shutdown delay	t_{DHZ}	C_L=15pF, S2 closed(3)			100	ns
Receiver input/output delay	t_{RPLH}	$\|V_{ID}\|$≥2.0V Rise and fall time ≤15ns(4)			150	ns
Receiver input/output delay	t_{RPHL}				150	ns
|tRPLH-tRPHL|	t_{RSKD}	$\|V_{ID}\|$≥2.0V Rise and fall time≤15ns(4)			±10	ns
Receiver enable delay	t_{RZL}	C_L=100pF, S1closed(5)			50	ns
Receiver enable delay	t_{RZH}	C_L=100pF, S2closed(5)			50	ns
Receiver shutdown delay	t_{RLZ}	C_L=100pF, S1closed(5)			50	ns
Receiver shutdown delay	t_{RHZ}	C_L=100pF, S2closed(5)			50	ns
Turn-off mode enable time	t_{SHDN}		50		600	ns
drive wake-up delay	$t_{DZH(SHDN)}$	C_L=15pF, S2closed(3)			250	ns
drive wake-up delay	$t_{DZL(SHDN)}$	C_L=15pF, S1closed(3)			250	ns
Receiver wake-up delay	$t_{RZH(SHDN)}$	C_L=100pF, S2closed(5)			3500	ns
Receiver wake-up delay	$t_{RZL(SHDN)}$	C_L=100pF, S1closed(5)			3500	ns

(1) The test circuit is shown in Figure 1
(2) The test circuit is shown in Figure 2
(3) Test circuitry is shown in Figure 3
(4) Test circuitry is shown in Figure 4
(5) The test circuit is shown in Figure 5

Test Circuit

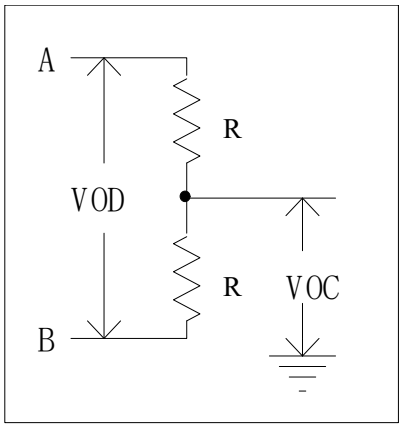

Figure1 Driver DC test

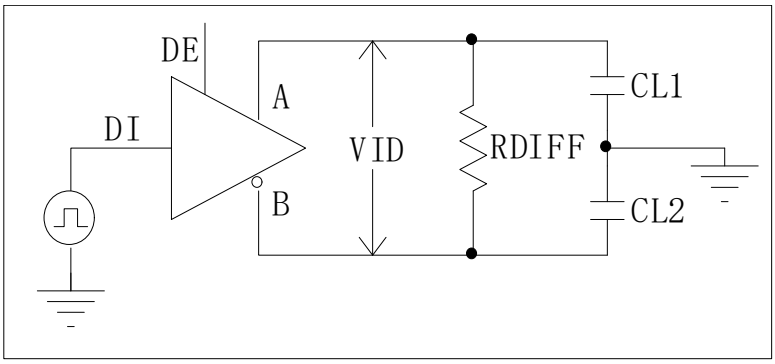

Figure 2 Driver timing test circuit

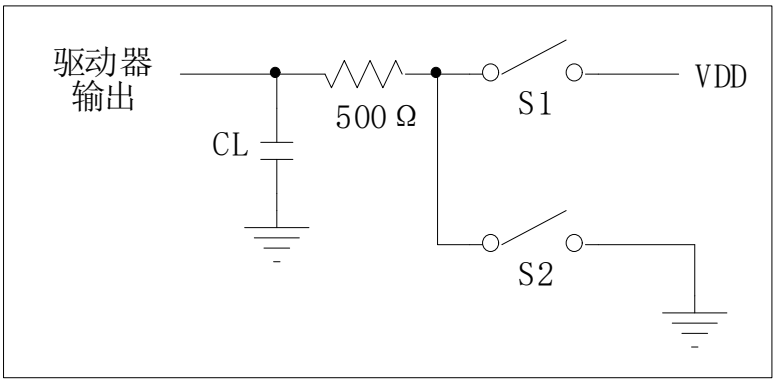

Figure 3 Driver enable/inhibit timing test

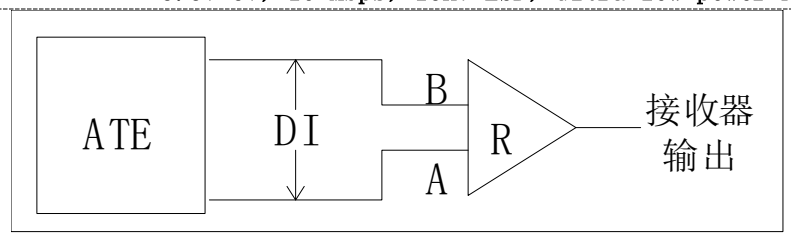

Figure 4 Receiver propagation delay test circuit

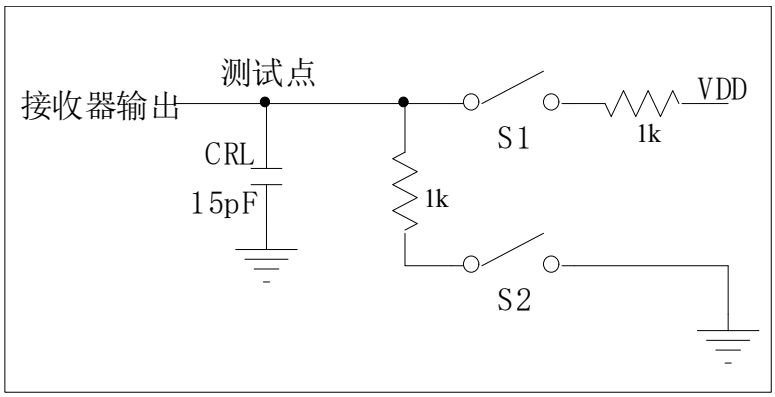

Figure 5 Receiver enable/inactivate timing test

Typical Application Circuit

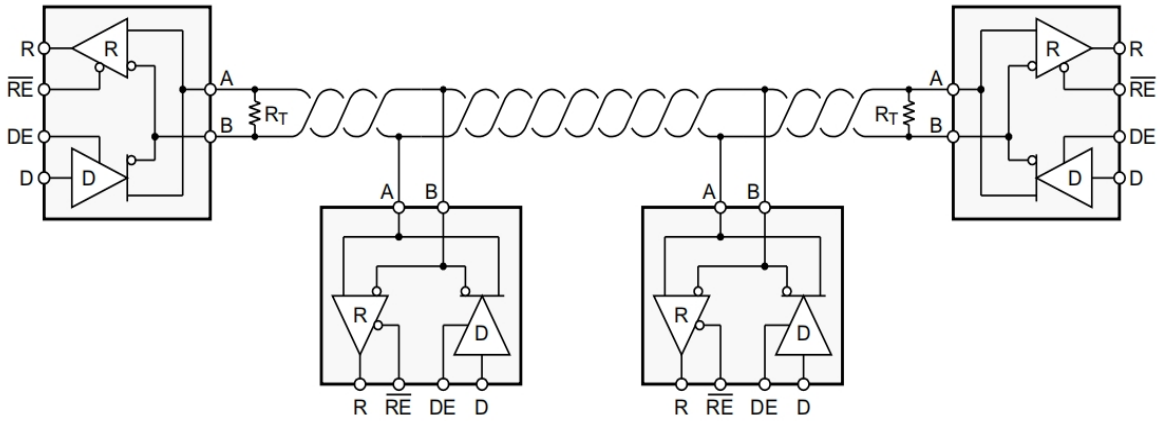

Figure 6 Typical Application

The transceiver is designed for bidirectional data communication over multi-point bus transmission lines. Figure 6 illustrates a typical network application circuit. These devices can also serve as linear transponders for cables exceeding 4,000 feet in length. To minimize signal reflection, termination matching at both ends of the transmission line should be performed using characteristic impedance, and branch lines outside the main trunk should be kept as short as possible.

Package（SOP8）

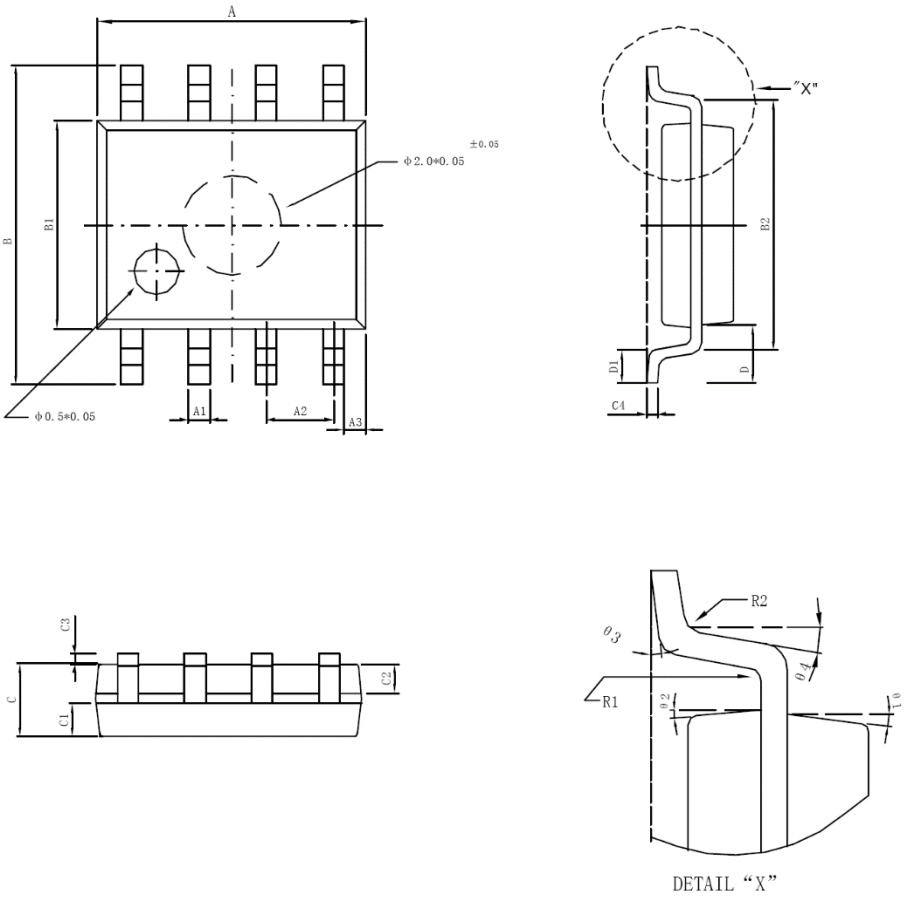

labeled	minimum (mm)	maximum (mm)	labeled	minimum (mm)	maximum (mm)
A	4.95	5.15	C3	0.10	0.20
A1	0.37	0.47	C4	0.20TYP	
A2	1.27TYP		D	1.05TYP	
A3	0.41TYP		D1	0.50TYP	
B	5.80	6.20	R1	0.07TYP	
B1	3.80	4.00	R2	0.07TYP	
B2	5.0TYP		θ1	17°TYP	
C	1.30	1.50	θ2	13°TYP	
C1	0.55	0.65	θ3	4°TYP	
C2	0.55	0.65	θ4	12°TYP	